MICRO-EPSILON

More Precision

induSENSOR // Linear inductive displacement sensors

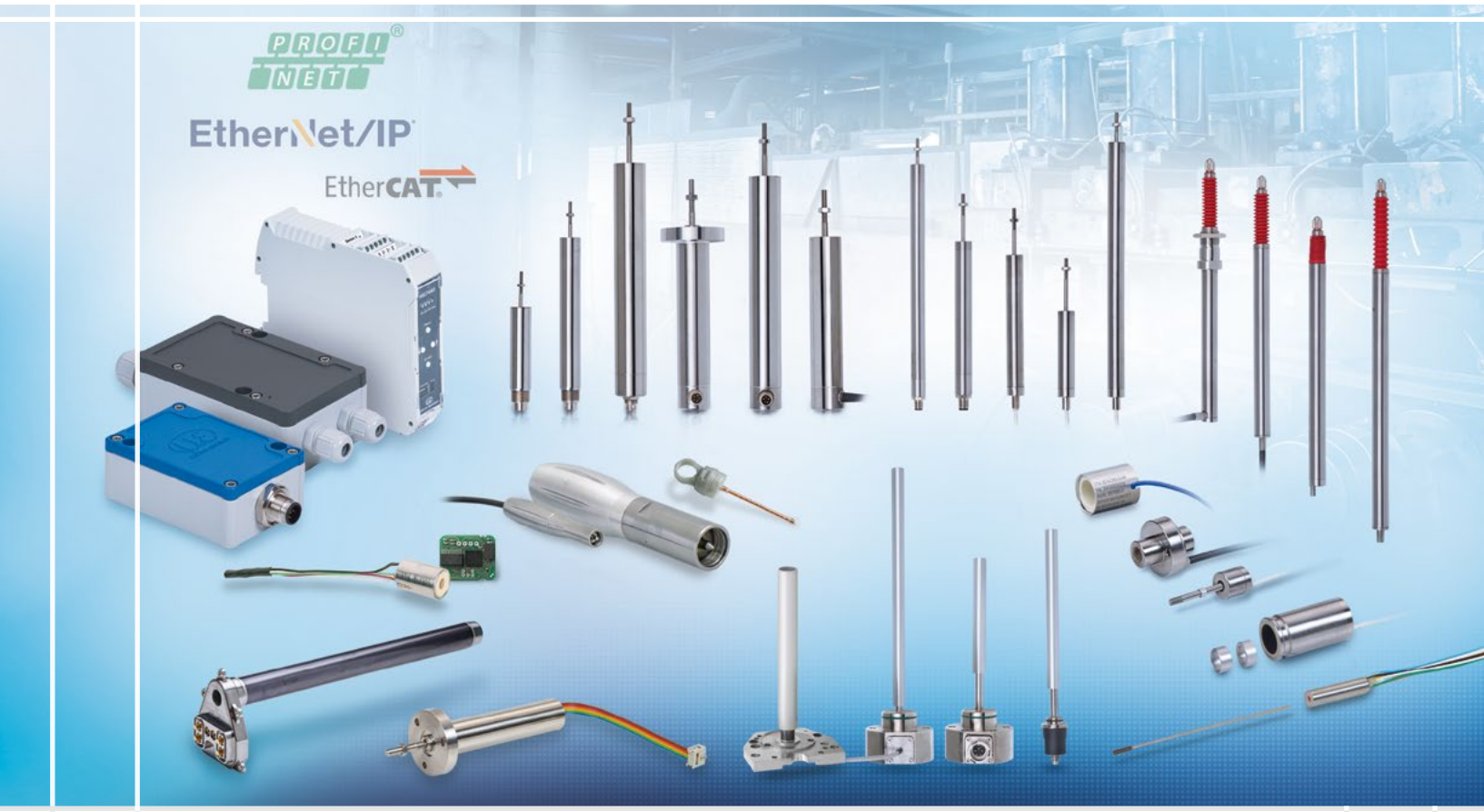

Compact controller for inductive displacement sensors

induSENSOR
MSC7401 / MSC7802

- Compact and robust aluminum housing
- High resolution and linearity
- Ideal for serial applications in machine building and automation
- User-friendly parameter setting via buttons or software
- Models with plug and cable bushings
- IP67 Robust design IP67
- INTER FACE Analog (U/I) / RS485/ Ethernet / EtherCAT / PROFINET / EtherNet/IP

The MSC7401 / MSC7802 controllers are designed to be operated with measuring gauges and displacement sensors of the DTA (LVDT) and LDR (half-bridge sensors) series. Due to their robust aluminum housing protected to IP67, the controllers are pre-destined for industrial measurement tasks.

A large variety of compatible, inductive displacement sensors and gauges from Micro-Epsilon combined with an optimized price/performance ratio opens up numerous fields of applications in automation technology and machine building. The controller is easily set up using buttons or software. Besides the basic settings, adjusting the measuring systems is also possible. Users can either choose the symmetrical adjustment around the zero point in order to make optimum use of the specific advantages of differential sensors, or teach in two almost arbitrary points within the measuring range. If desired, these settings can be made at the factory and documented with a manufacturer test certificate.

Example configuration
MSC7401 with DTA-5G8-3-CA gauge:

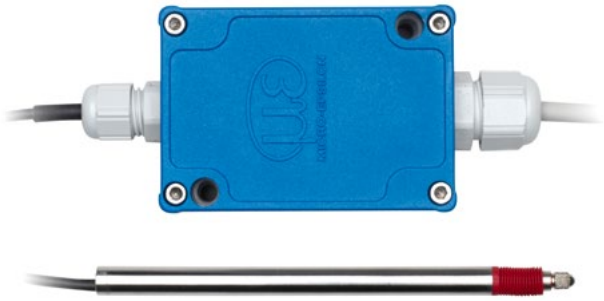

Technical Data	Channel with DTA-5G8-3-CA
Measuring range	±5 mm
Linearity	30 µm
Resolution	~1.2 µm
Output	Analog and RS485

Model		MSC7401	MSC7802
Resolution [1]	DTA series	13 bits (0.012 % FSO) at 50 Hz 12 bits (0.024 % FSO) at 300 Hz	
	LDR series	12 bits (0.024 % FSO) at 50 Hz 11 bits (0.048 % FSO) at 300 Hz	
Frequency response (-3dB)		300 Hz (adjustable only via software)	
Linearity		≤ ±0.02% FSO	
Temperature stability	DTA series	≤ 100 ppm FSO/K	
	LDR series	≤ 125 ppm FSO/K	
Supply voltage		14 … 30 VDC (5 … 30 VDC [2])	
Max. current consumption		40 mA	80 mA
Input impedance [3]		> 100 kOhm	
Digital interface		RS485 / PROFINET [4] / EtherNet/IP [4] / Ethernet [4] / EtherCAT [4]	RS485 / PROFINET [4] / EtherNet/IP [4]
Analog output [4]		(0)2 … 10 V; 0.5 … 4.5 V; 0 … 5 V (Ra > 1 kOhm) or 0(4) … 20 mA (load < 500 ohm)	
Connection		Sensor: screw terminal AWG 16 up to AWG 24; with ferrule up to AWG 28 or 5-pin M9 connector (cable see accessories) Supply/signal: screw terminal AWG 16 up to AWG 24; with ferrule up to AWG 28 or 5-pin M12 connector (cable see accessories)	
Mounting		2x mounting holes for M4	
Temperature range	Storage	-40 … +85 °C	
	Operation	-40 … +85 °C	
Shock (DIN EN 60068-2-27)		40 g / 6 ms in 3 axes, 2 directions and 1000 shocks each 100 g / 5 ms in 3 axes, 2 directions and 9 shocks each	
Vibration (DIN EN 60068-2-6)		±1.5 mm / 5 … 57 Hz in 3 axes, 10 cycles each ±20 g / 57 … 500 Hz in 3 axes, 10 cycles each	
Protection class (DIN EN 60529)		IP67 (plugged)	
Material		Aluminum die casting	
Weight		approx. 200 g	approx. 280 g
Compatibility		full-bridge sensor/LVDT (DTA series) and half-bridge sensor (LDR series)	
No. of measurement channels		1	2

FSO = Full Scale Output
[1] Noise: AC RMS measurement via RC low-pass filter of the 1st order with fc = 5 kHz
[2] With technical restrictions of the output signal (load and signal span)
[3] Sensor side
[4] Connection via interface module (see accessories)
[5] 0 V ≙ < 30 mV, 0 mA ≙ < 35 µA; with controllers including a current output, the output signal is limited to approx. 21 mA

MSC7401

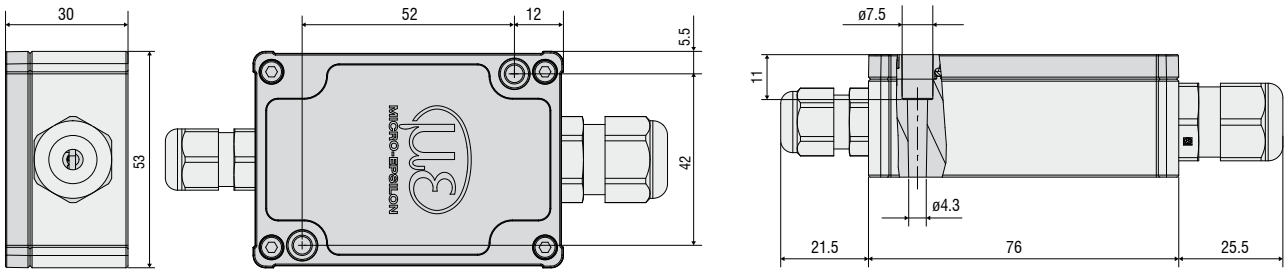

MSC7401(010)

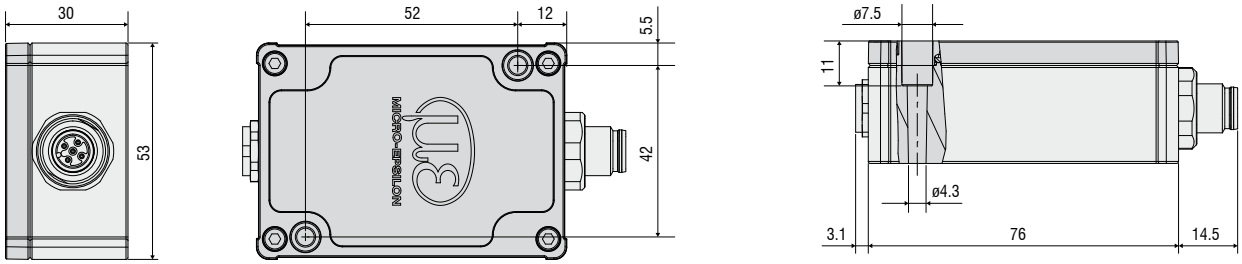

MSC7401(020)

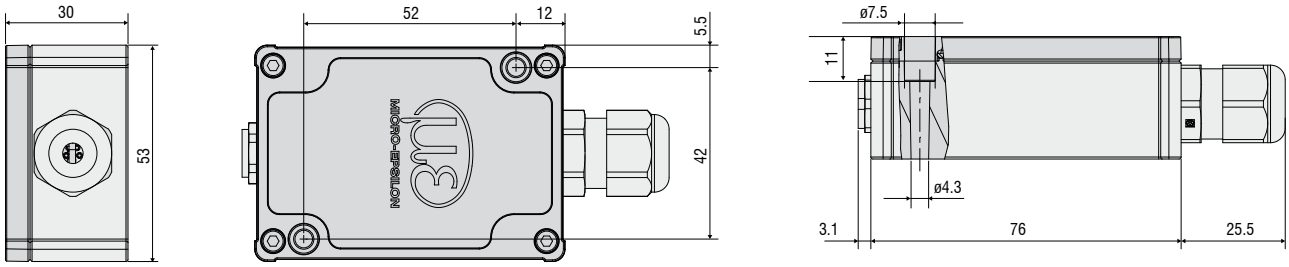

MSC7401(030)

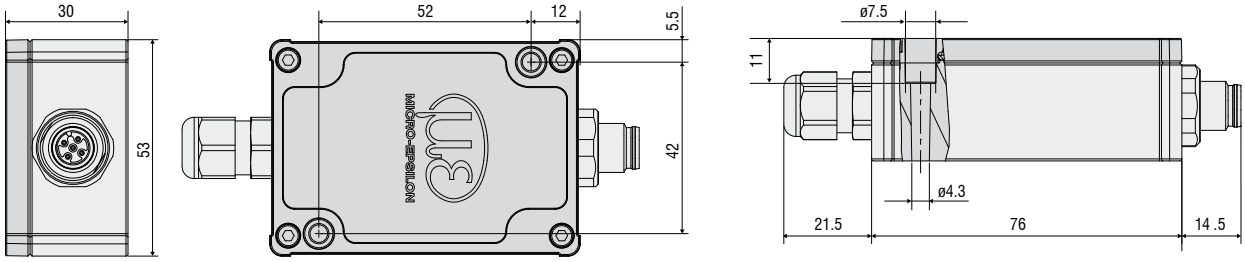

MSC7802

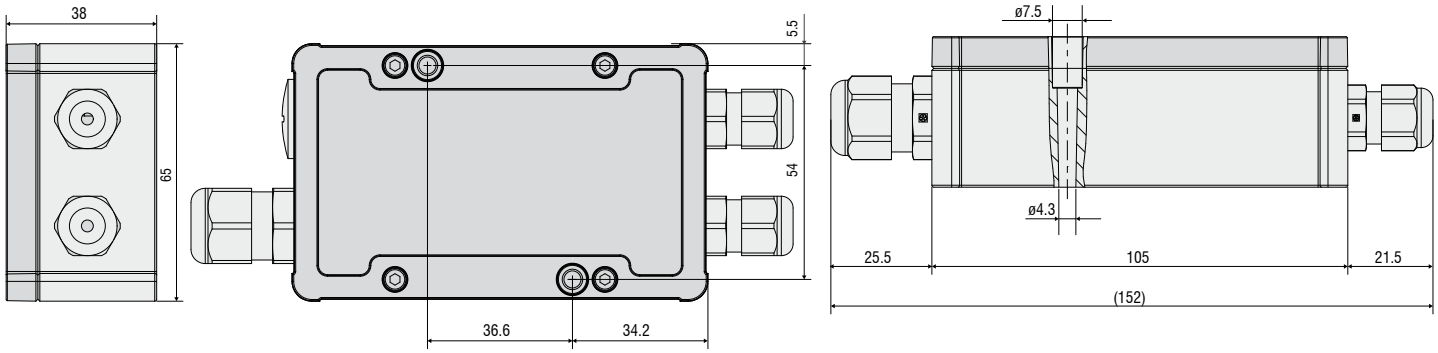

MSC7802(010)

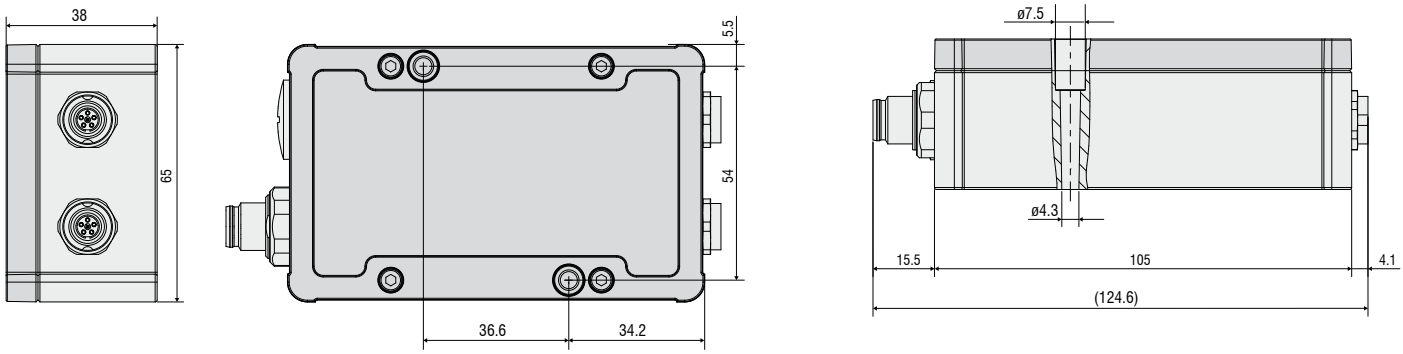

MSC7802(020)

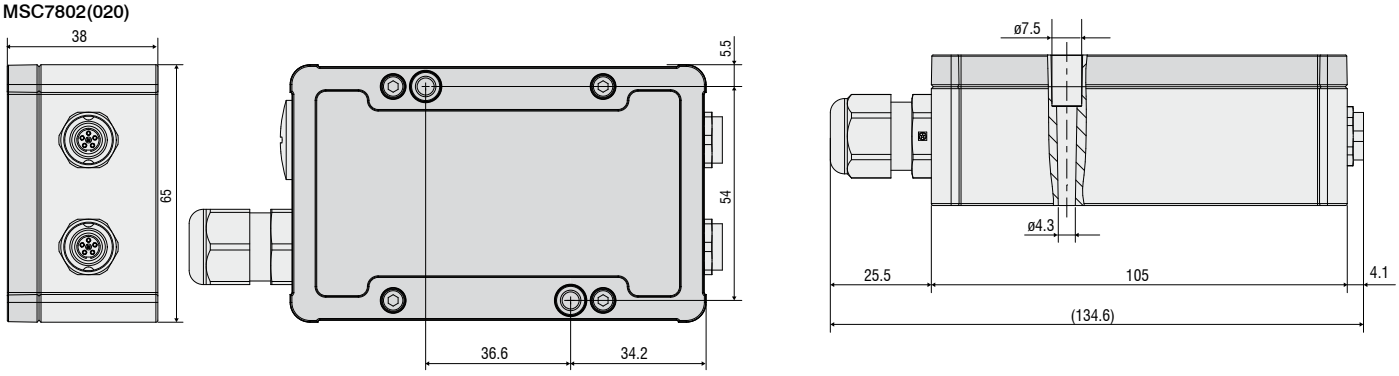

MSC7802(030)

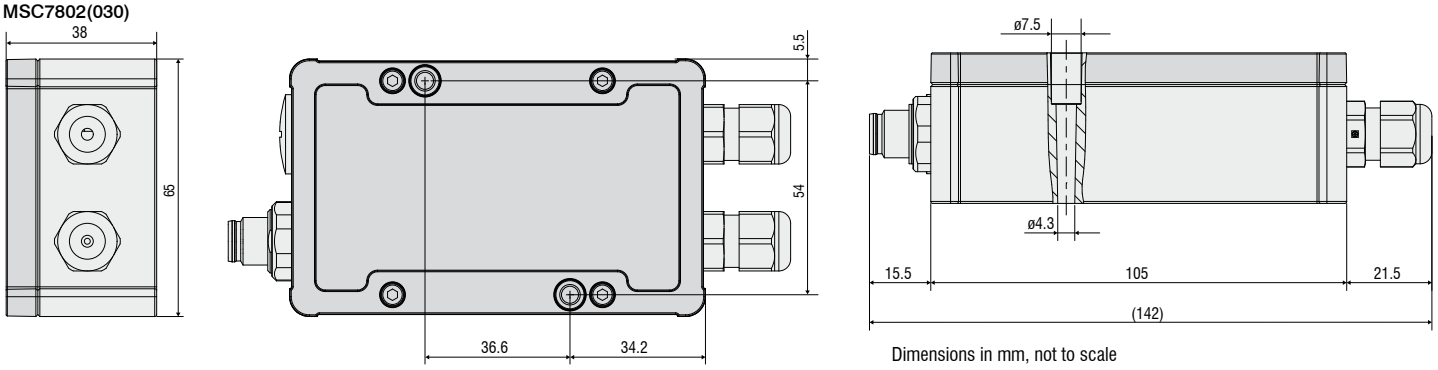

Dimensions in mm, not to scale

Sensors and Systems from Micro-Epsilon

Sensors and systems for displacement, distance and position

Sensors and measurement devices for non-contact temperature measurement

Measuring and inspection systems for metal strips, plastics and rubber

Optical micrometers and fiber optics, measuring and test amplifiers

Color recognition sensors, LED analyzers and inline color spectrometers

3D measurement technology for dimensional testing and surface inspection

MICRO-EPSILON

MICRO-EPSILON USA
8120 Brownleigh Dr. · Raleigh, NC 27617 / USA
Phone +1/919/787-9707 · Fax +1/919/787-9706
me-usa@micro-epsilon.com · **www.micro-epsilon.com**